REV.	ECN.NO.	DATE

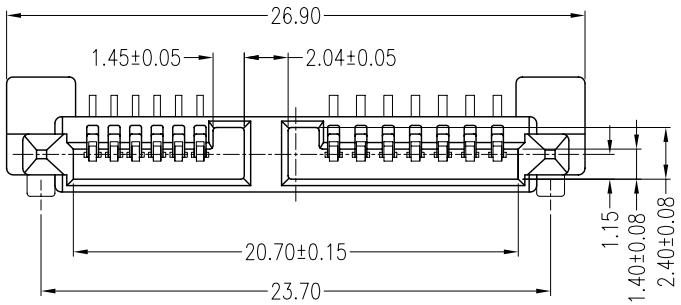

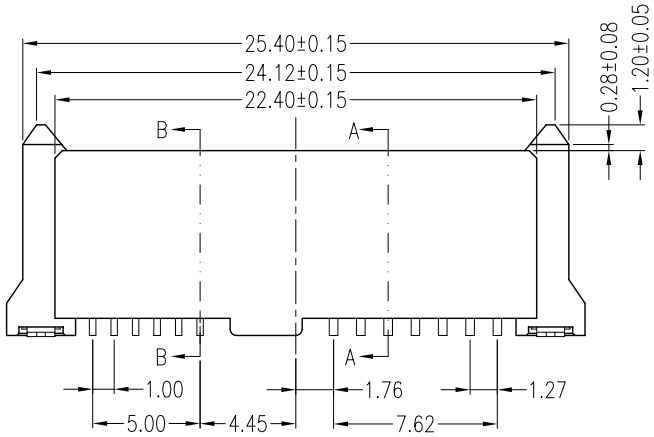

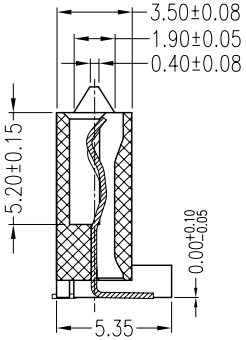

SEC:A-A

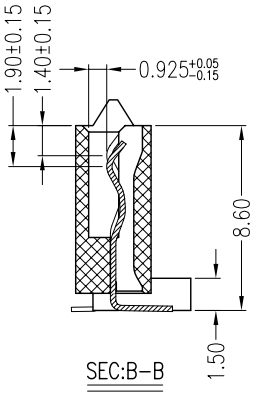

SEC:B-B

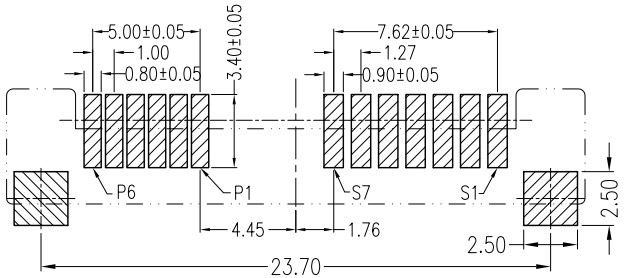

RECOMMENDED PCB LAYOUT

Notes:

*Material

Housing: LCP, UL 94V-0 rated;
Color: Black.
Contact: Phosphor Bronze
Plating: Gold Plating over Nickel on contact area
Tin plating on solder Tail.
Screw: Fe Plating over Zn

*Mechanical

Insertion Force: 45N max.
Withdrawal Force: 10N min.
Durability: 500 cycles

*Electrical Specification

Current Rating: 1.5 Ampere per contact
Contact Resistance: 30 Milliohms max.
Insulation Resistance: 1000 Megohms min.
Dielectric Withstanding Voltage: 500 VAC

*Environmental

Operating Temperature: -55°C to +85°C

*Products in line with environmental regulations:
ROHS(2002/95/EC)Compliant

*How to Order:

WATN - 13 D 3 L 1 P U 3

- 3: Tray
- U: Lead Free
- P: Phosphor Bronze
- 1: Black
- L: LCP
- 3: SMT
- Selective Gold:A:Flash,D:15u", F:30u"
- NO. of Contacts
- Series No.

REV					
Units mm	Scale 8:3	Drawing By	Data	Wellco T&C Co., Ltd.	
Tolerance Unless Otherwise Specified		Reviewed By	Data	Date 10/08/08	
.X ~ ±0.38				Sheet 1 of 1	Title: S ATA 7+6P Vertical SMT Female
.XX ~ ±0.25		Approval By	Data	Third Angle Projection	
.XXX ~ ±0.20				Drawing No.	REV
Angle ~ ± 3°					